Planetary Gearhead P32H

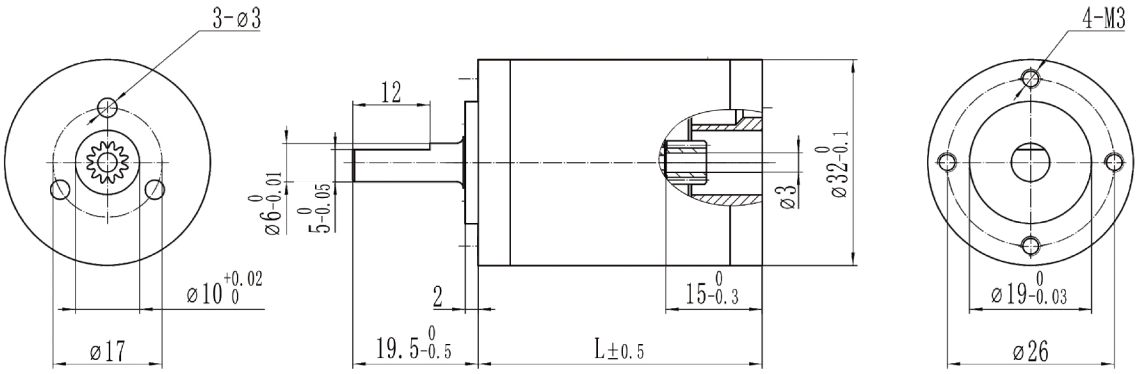

Gearhead Data

1	Radial play	mm	≤0.1							
2	Axial play	mm	≤0.2							
3	Max. force for press fits	N	100							
4	Max. radial load	N	8							
5	Max. axial load	N	8							
6	Recommended temperature range		-20°C~+125°C							
7	Number of stages		1	2		3		4		5
8	Max. continuous torque	Nm	1	3		6		6		6
9	Max. intermittent torque at gear output	Nm	1.25	3.75		7.5		7.5		7.5
10	Max. efficiency		90	81		73		65		59
11	Weight	g	125	147		169		191		213
12	Gearhead length L	mm	31.6	37.9		44.2		50.5		56.8
13	Reduction		3.11	9.68	33.06	30.11	71.68	93.68	206.72	291.46	693.79
Other speed ratio please ask for advice			3.71	11.56		35.95	79.33	111.85	223	347.97	706.93
			4	13.8		42.92	80.14	133.53	245.96	415.43	765.21
			4.8	14.93		46.46	85.58	144.54	246.79	449.68	767.8
			5.75	17.83		51.24	85.87	159.42	266.24	495.97	828.3
				17.89		55.47	102.51	172.56	267.14	536.86	831.1
				19.2		55.65	102.86	173.15	294.64	538.68	988.89
				21.36		62.01	110.59	178.23	297.66	592.13	1277.95
				23.04		66.22	122.8	190.33	317.86	640.95	1428.77
				27.6		66.44	132.48	206.02	318.93	643.12	1846.41

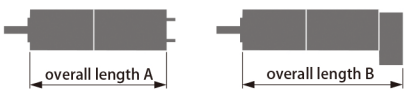

SMJ Modular System

+Motor	Page	Overall length A					Overall length B				
		1	2	3	4	5	1	2	3	4	5
DR3068G	29	99.1	105.4	111.7	118	124.3					
SR3081G	34						112.6	118.9	125.2	131.5	137.8