DRH1641B | Graphite Brush

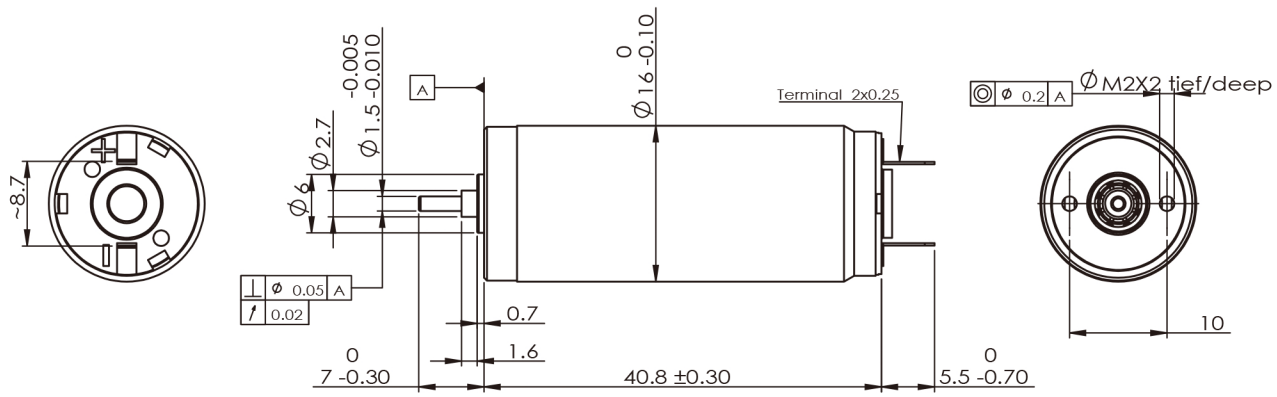

Motor Data

	电机型号	Motor model			DRH164106B	DRH164112B	DRH164124B
1	额定电压	Nominal voltage	V	V	6	12	24
2	空载转速	No load speed	rpm	Wnl	12300	14000	12200
3	空载电流	No load current	mA	Inl	45	29	23
4	额定转速	Nominal speed	rpm	Wc	10240	11700	9600
5	额定转矩	Nominal torque	mNm	Tc	7.2	9.4	8.7
6	额定电流	Nominal current	A	Ic	1.55	1.15	0.47
7	输出功率	Output power	W	Pc	7.7	11.5	8.7
8	堵转扭矩	Stall torque	mNm	Tmax	42.1	56.5	39.5
9	堵转电流	Stall current	A	Imax	9.1	6.9	2.12
10	最大效率	Max. efficiency	%	ηmax	87	83	78
11	线间电阻	Terminal resistance	Ω	Rt	0.66	1.73	11.3
12	力矩系数	Torque constant	mNm / A	Kt	4.63	8.15	18.59
13	速度常数	Speed constant	rpm / V	Kn	2060	1172	514
14	速度扭矩比	Speed torque gradient	rpm / mNm	Δn / ΔT	285	242	296

Specifications

1	ambient temperature	Ta	-20~+65°C
2	Max.winding temperature	Tcoilmax	+85°C
3	Max.speed	Nmax	16000rpm
4	axial play	△t	0.05~0.15mm
5	number of pole pairs	2p	1
6	number of commutator segments		5
7	weight of motor	Wt	40g
8	Max.axial load(dynamic)		0.8N
9	Max.force for press fits(static)		15N
10	Max.radial load,4mm from flange		1.5N

Operating Range

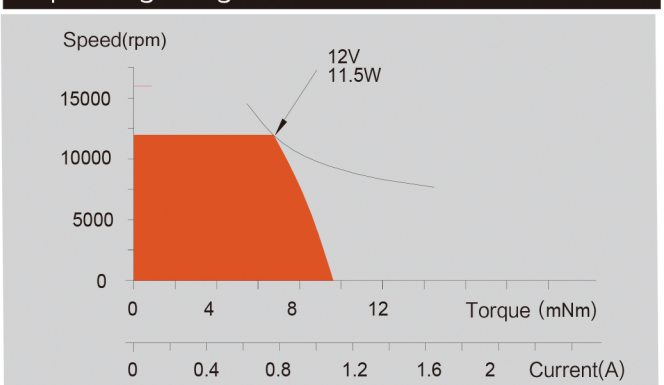

SMJ Modular System

Planetary Gearhead
Type P16H
Diameter φ16
Torque 0.01~0.4N·m

Magnet Encoder
1000 CPT
3 channels