DR1641B | Graphite Brush

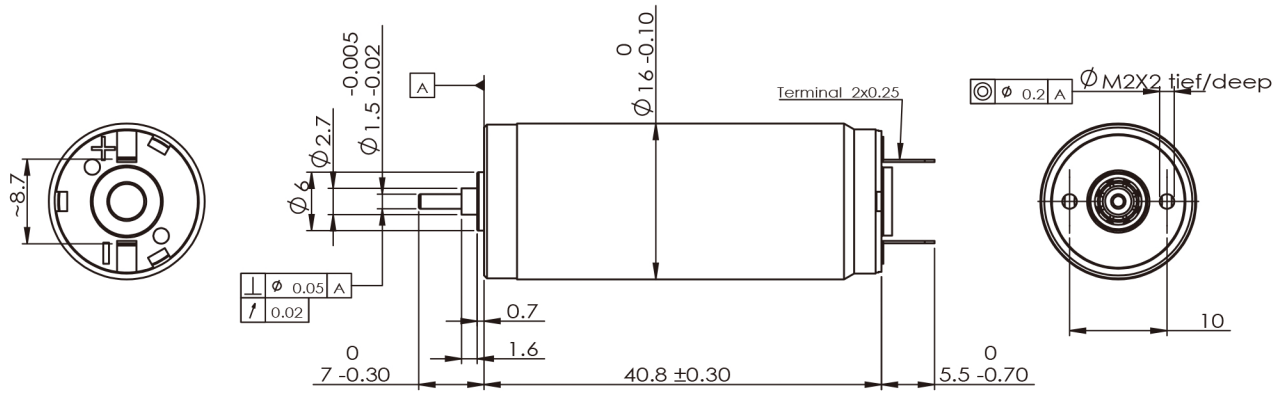

Motor Data

	电机型号	Motor model			DR164103B	DR164106B	DR164112B	DR164118B	DR164124B	DR164136B	DR164148B
1	额定电压	Nominal voltage	V	V	3	6	12	18	24	36	48
2	空载转速	No load speed	rpm	Wnl	8400	14500	13900	13200	14500	14100	14000
3	空载电流	No load current	mA	Inl	90	56	26	36	20	14	12
4	额定转速	Nominal speed	rpm	Wc	7400	12800	11700	11500	12620	12200	12100
5	额定转矩	Nominal torque	mNm	Tc	3.5	2.6	3.9	4.3	4.4	4.3	4.4
6	额定电流	Nominal current	A	Ic	1.04	0.66	0.47	0.34	0.28	0.18	0.13
7	输出功率	Output power	W	Pc	2.7	3.5	4.8	5.2	5.8	5.5	5.6
8	堵转扭矩	Stall torque	mNm	Tmax	29.8	21.3	28.3	31.2	31.83	36.3	37.3
9	堵转电流	Stall current	A	Imax	8.82	5.45	3.43	2.43	2.03	1.49	1.14
10	最大效率	Max. efficiency	%	ηmax	87	87.2	84.2	86	86	86.5	86.4
11	线间电阻	Terminal resistance	Ω	Rt	0.34	1.1	3.5	7.4	11.8	24.2	42.1
12	力矩系数	Torque constant	mNm / A	Kt	3.38	3.91	8.24	12.83	15.65	24.38	32.74
13	速度常数	Speed constant	rpm / V	Kn	2825	2442	1174	744	610	397	296
14	速度扭矩比	Speed torque gradient	rpm / mNm	Δn / ΔT	285	628.9	492	383	427	389	375
15	线间电感	Terminal inductance	mH	L	0.014	0.034	0.544	0.304	0.63	0.986	1.69
16	转子转动惯量	Rotor inertia	gcm²	J	1.35	1.37	1.33	1.28	1.26	1.24	1.2

Specifications

1	ambient temperature	Ta	-20~+65°C
2	Max.winding temperature	Tcoilmax	+85°C
3	Max.speed	Nmax	16000rpm
4	axial play	△t	0.05~0.15mm
5	number of pole pairs	p	1
6	number of commutator segments		5
7	weight of motor	Wt	40g
8	Max.axial load(dynamic)		0.8 N
9	Max.force for press fits(static)		15N
10	Max.radial load,4mm from flange		1.5N

Operating Range

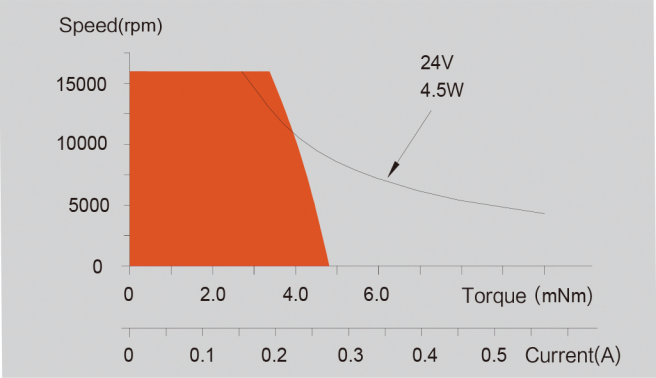

SMJ Modular System

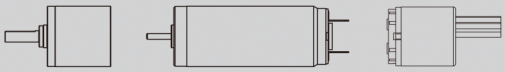

Planetary Gearhead
Type P16H
Diameter φ16
Torque 0.01~0.4N·m
See page 36

Magnet Encoder
1000 CPT
3 channels
see page 32